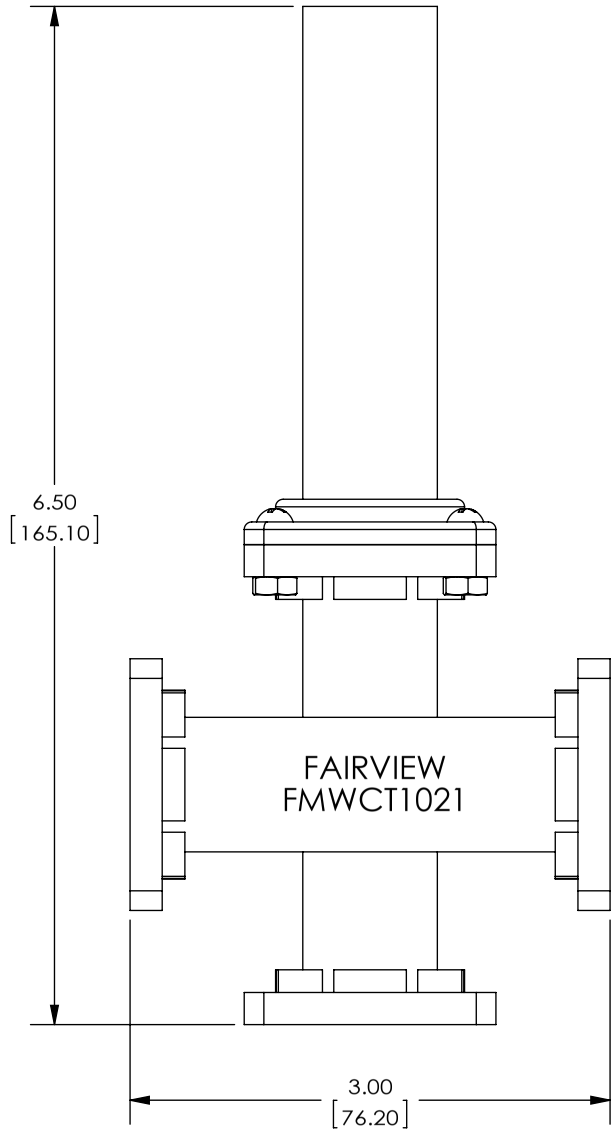

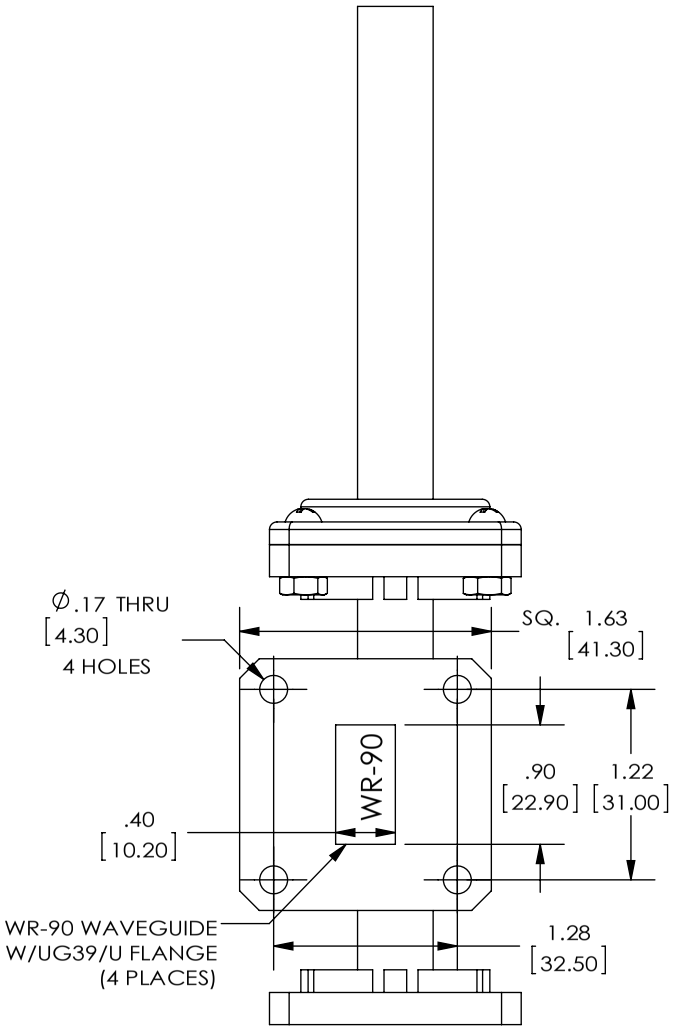

FAIRVIEW MICROWAVE INC.

ALLEN, TX 75013 WWW.FAIRVIEWMICROWAVE.COM

NOTES:
1. UNLESS OTHERWISE SPECIFIED ALL DIMENSIONS ARE NOMINAL.
2. ALL SPECIFICATIONS ARE SUBJECT TO CHANGE WITHOUT NOTICE AT ANY TIME.
3. DIMENSIONS ARE IN INCHES [mm].

TITLE	DWG NO	CAGE CODE
	FMWCT1021	3FKR5

CAD FILE 051517	SHEET	SCALE N/A	SIZE A	1408