REVISION					
ZONE	REV.	DESCRIPTION	DATE	CHANGED BY	APPROVED BY
	A	INITIAL RELEASE	01/31/2023	HBAKKE	AGANWANI

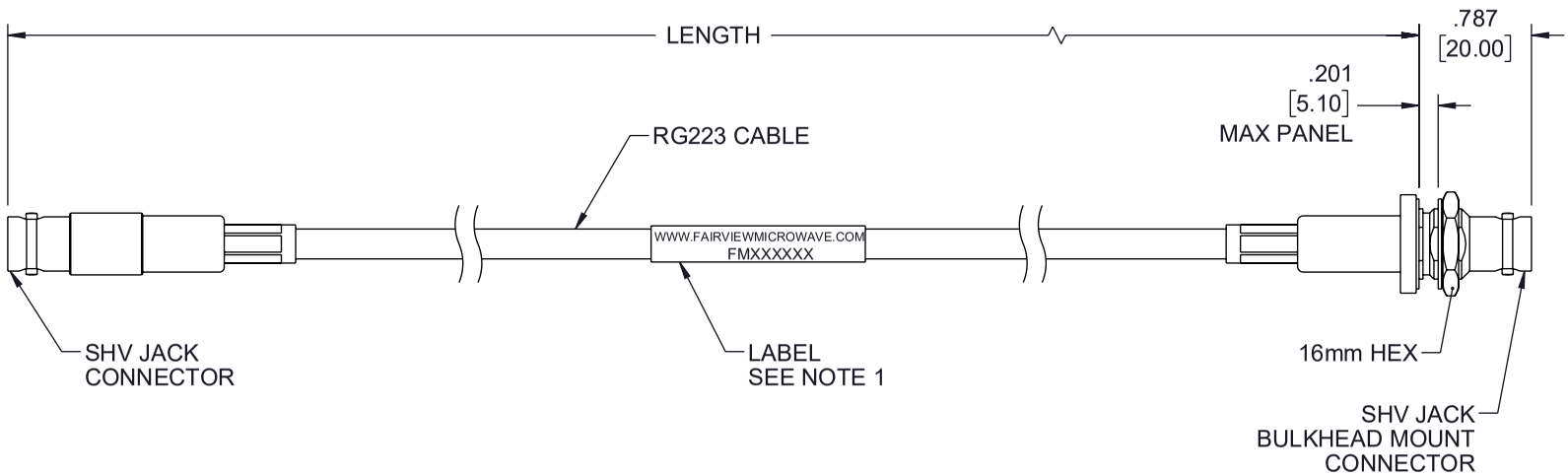

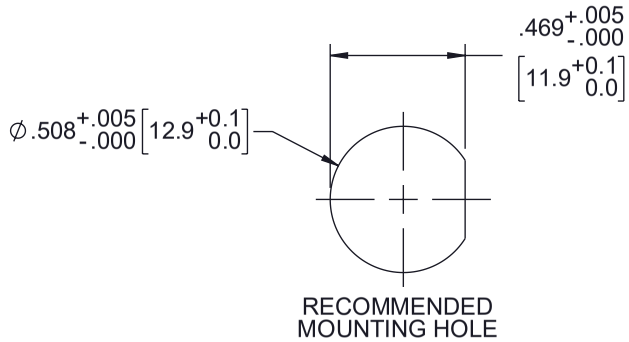

NOTES:
1. CABLE ASSEMBLY LENGTH LABEL PLACEMENT: 36 INCHES OR LESS, ONE LABEL APPROXIMATELY CENTERED. LONGER THAN 36 INCHES, TWO LABELS APPROXIMATELY 6 INCHES FROM EACH CONNECTOR.
2. CABLE ASSEMBLIES SHALL BE TESTED FOR CONTINUITY.

THE INFORMATION CONTAINED IN THIS DRAWING IS THE SOLE PROPERTY OF INFINITE ELECTRONICS, INC. ANY REPRODUCTION IN PART OR WHOLE WITHOUT THE WRITTEN PERMISSION OF INFINITE ELECTRONICS, INC. IS PROHIBITED.
THESE COMMODITIES, TECHNOLOGY OR SOFTWARE WERE EXPORTED FROM THE UNITED STATES IN ACCORDANCE WITH THE EXPORT ADMINISTRATION REGULATIONS. DIVERSION CONTRARY TO U.S. LAW PROHIBITED.

UNLESS OTHERWISE SPECIFIED
LEADING DIMENSIONS ARE INCHES
DIMENSIONS IN [ ] ARE MILLIMETERS

TOLERANCES:
.X = ± .2 [5]
.XX = ± .02 [.5]
.XXX = ± .005 [.13]
FRACTIONS ± 1/32
ANGLES ± 1°

CABLE LENGTH TOLERANCES:
≤12 [305] = +1 [25] / -0
>12 [305] ≤ 60 [1524] = +2 [51] / -0
>60 [1524] ≤ 120 [3048] = +4 [102] / -0
>120 [3048] ≤ 300 [7620] = +6 [152] / -0
>300 [7620] = +5% / -0

ALL DIMENSIONS ARE FOR REFERENCE ONLY AND SUBJECT TO CHANGE WITHOUT NOTICE.

Fairview Microwave®
an INFINITE brand
Website: www.FairviewMicrowave.com
Phone: 1.800.715.4396 | 1.972.649.6678

INTERPRET ALL DIMENSIONS AND TOLERANCES PER ASME Y14.5

SCALE	SHEET
NONE	1 OF 1

DESCRIPTION
SHV JACK TO SHV JACK BULKHEAD CABLE USING RG223 COAX

SIZE	CAGE CODE	DRAWN BY	ITEM NO.	REV
A	3FKR5	HBAKKE	FMCA3162	A

T-Rev.D2