4.3-10
MALE

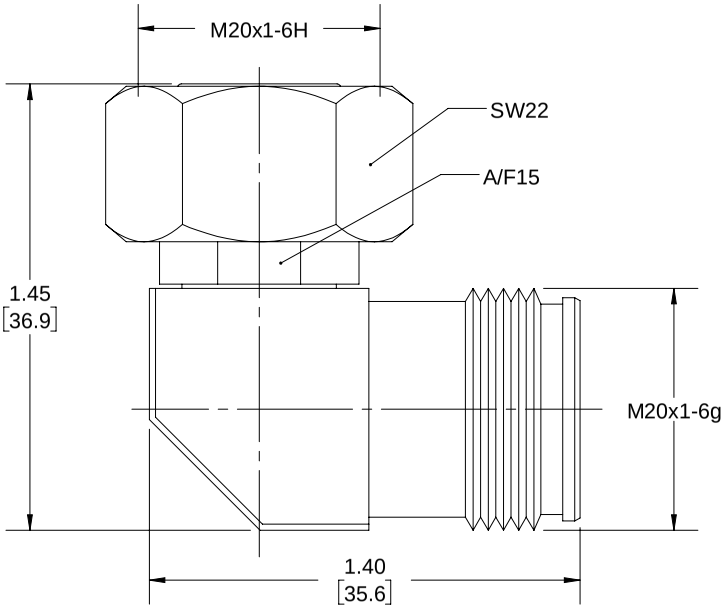

4.3-10
FEMALE

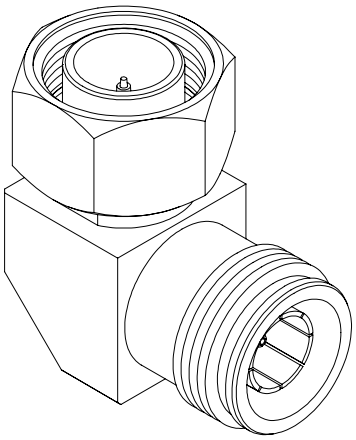

STANDARD TOLERANCES
.X Ñ0.2
.XX Ñ0.01
.XXX Ñ0.005

*STANDARD TOLERANCES APPLY ONLY TO DIMENSIONS IN INCHES

Fairview Microwave
RF COMPONENTS ON DEMAND. Done!

NOTES:
1. UNLESS OTHERWISE SPECIFIED ALL DIMENSIONS ARE NOMINAL.
2. ALL SPECIFICATIONS ARE SUBJECT TO CHANGE WITHOUT NOTICE AT ANY TIME.
3. DIMENSIONS ARE IN INCHES [mm].

TITLE	DWG NO	CAGE CODE
	FMAD1167	3FKR5

CAD FILE 12/04/18	SHEET 1 OF 1	SCALE N/A	SIZE A	CN2245